GENERAL

PVC SDR 35 Sanitary Gravity Sewer Pipe. This specification covers PVC Standard Dimension Ratio (SDR) 35 pipe for gravity sewer and surface water applications with a pipe stiffness of 46. This product is intended for gravity applications where the operating temperature will not exceed 140 degrees F.

Materials

Pipe shall be manufactured from virgin rigid PVC (polyvinyl chloride) vinyl compounds with a cell class of 12364 as identified in ASTM D 1784. The requirements of this specification are intended to provide pipe suitable for nonpressure drainage and surface water. The pipe shall be manufactured in accordance ASTM D-3034, and shall have a standard dimension ratio of 35 (SDR 35). The nominal laying lengths of pipe sections shall be thirteen (13) feet unless shorter or longer lengths are required for construction conditions. PVC SDR 35 pipe shall conform to ASTM D 3034 for gasket pipe with a minimum pipe stiffness of 46. Gaskets shall conform to ASTM F 477.

INSTALLATION

Location and Grade of Gravity Sewers

Sanitary gravity sewers shall be constructed of the depths, locations, and grades as shown on the plans or directed by the Engineer.

Grade and Alignment

All gravity conduit pipe shall be installed using a pipe laser and target system through the pipe. On short runs, (Fifty Feet (50') or less), the Contractor may request the Engineer's approval to use a ground surface laser. The laser must be capable of projecting the required pipe grade, i.e., not simply a laser level.

The use of a pipe laser system will not preclude the use of differential leveling instruments for determining the correct elevation of the pipe. The Contractor shall verify pipe grade and elevation at each manhole and record in a field book as outlined above.

Laying of Gravity Sewers

Special care shall be taken to lay pipe to proper depth and line; the pipe shall be graded, bedded, and backfilled. Before lowering and while suspended, inspect the pipe for defects and to detect cracks. Any defective, damaged, or unsound pipe shall be rejected and removed from the site. Remove all foreign matter or dirt from the inside of the pipe before it is lowered into its position in the trench, and keep the pipe clean by approved means during and after laying.

Any defective or damaged pipe, or any pipe, which had its grade or alignment disturbed after laying shall be taken up and replaced. All openings along the line of pipe shall be closed, and at the suspension of work, suitable stoppers shall be placed to prevent earth from entering the pipe. Unless authorized by the Engineer, no pipe shall be laid in water.

All pipe when jointed shall form a true and smooth line of pipe. Pipe shall not be trimmed except for closures, and pipes not making a good fit shall be removed. The interior surface of all pipes shall be clean when laid. Pipes joined above the trench shall be lowered carefully to prevent pulling apart. No pipe shall be covered until all joints have been inspected and approved by the Engineer or his representative.

Sealing Pipe in Manholes

The annular space between the pipe and structure must be sealed where the pipe enters or exits each structure. This annular space shall be sealed using 'A-Lok' brand compression gaskets or rubber 'PSX' waterproof boots installed at the time of manufacture.

Excavation

The excavation shall be at the locations as shown on the plans. The trench shall be excavated so that the pipe can be laid to such alignment and depth that a minimum of 4'- 0" earth cover is maintained over the top of the pipe for sewer laterals and 5'-0" earth cover for sewer mains.
Trenches for gravity sewers shall be excavated such that the walls of the trench are vertical from the bottom of the trench to point one foot above the top of the pipe. Trench width shall be no more than two feet greater than the outside diameter of the pipe being laid. Trench preparation shall proceed ahead of the pipe-laying operation no further than the maximum distance allowed by the relevant governmental agencies.

Sheeting, Shoring, and Bracing

All trenches and other excavations shall be properly sheeted and braced, when and where necessary to provide safe working conditions and to protect the new or existing structures. No unreasonable width of trench will be permitted to avoid use of sheeting. Bracing shall be so arranged as not to place any strain on portions of completed work until the general construction has proceeded far enough to provide ample strength to avoid possible damage. Any damage to new or existing structures whatsoever occurring through settlements due to failure or lack of sheeting or bracing shall be repaired by the Contractor at his own expense.

In general, the sheeting and bracing shall be removed, as the trench or excavation is refilled in such a manner as to avoid the caving in of the work. The voids left by the withdrawal of the sheeting shall be carefully filled by ramming, or otherwise as directed. Wherever the sheeting or shoring cannot be removed without injury to the new work or existing structures, it shall be left in place at the Contractor's expense.

Removal of Water

The Contractor shall at all times during construction provide and maintain ample means and devices with which to promptly remove and dispose of all water entering the excavations or other parts of the work and shall keep said excavations dry until the structures to be built therein are completed. No masonry shall be laid in water nor shall water be allowed to rise over masonry, until the concrete and mortar has attained a sufficient and satisfactory set. In no event shall water be allowed to rise over masonry if there is danger of floatation or of setting up unequal pressures in the concrete, until the concrete has set at least 24 hours and any danger of floatation has been removed.

In order to provide a dry foundation, the Contractor, if required by the Engineer, shall pre-drain all wet material (except hard pan or rock) by lowering the ground water to a depth of at least one foot below the deepest point of the subgrade. The work of pre-draining shall be done by the use of a well point system, or by any other method approved by the Engineer that will permit the construction work to be carried on under dry foundation conditions. All discharge water shall be piped to the nearest point of disposal in order to prevent such water from again entering the excavation. Any method or system that may be used to lower the ground water shall be kept in operation continuously unless otherwise especially permitted. The approval of the Engineer for the use of any proposed system shall not relieve the Contractor from the responsibility of providing and maintaining dry excavations as required.

The Contractor shall dispose of water from the work in a suitable manner without damage to adjacent property or sewers. No water shall be drained into existing Sanitary Sewers or into work built or under construction sewers unless the consent of the Engineer is first obtained.
All removal and handling of water required to maintain dry trenches or other excavations for the construction of sewers, water mains, or other structures in the dry, shall be at the expense of the Contractor.

Pipe Bedding and Backfilling

In unpaved areas:

All pipe shall rest on a firm bedding which supports the pipe over its entire length. The bedding shall be sand or pea gravel placed from the bottom of the trench to the bottom of the pipe. Natural material encountered during excavation matching the requirements for bedding material may be used in lieu of sand or pea gravel with approval of the Engineer.

The haunching for the pipe shall be placed on the pipe bedding in lifts not exceeding six inches (6") and compacted to 85% Standard Proctor Density. The haunching will be placed to the springline of the pipe and will be of the same material as the pipe bedding.

The Contractor shall be responsible for informing the Engineer if an unsuitable bedding is encountered which will cause excessive pipe settlements and deflections. If unsuitable material is encountered, such material shall be removed to minimum of at least six (6) inches below the trench bottom or to a depth as indicated by the Engineer. The removed material shall be replaced, under direction of the Engineer, with clean, stable backfill material.

Any backfill for gravity sewers shall be material excavated from the trenches, free from rocks, boulders, large or frozen lumps, wood or other extraneous material, unless otherwise noted.

Clean, initial backfill will be placed on the pipe haunching in lifts not exceeding six (6) inches and compacted to 80% Standard Proctor Density. The initial backfill will be placed to a point no less than twelve (12) inches above the top of the pipe.

All trenches or excavations shall be backfilled to the original surface of the ground or such other grades as shown or directed. The Engineer has final approval on the type of backfill and may substitute an alternative backfill if the excavated material is deemed unsuitable.

In areas where the proposed sewer will be installed under existing or proposed asphalt or concrete pavements, concrete curbs, or sidewalks, or where the sewer falls within a 1:1 influence line from the bottom of the roadbed or curb, the pipe will be bedded and the trench backfilled with I.D.O.T. B-Borrow in lifts not exceeding six (6) inches and compacted to 95% Standard Proctor Density. The granular material backfill will be placed to the bottom of the proposed, or replacement, pavement structure.
The Owner may, at any time, conduct compaction tests of the trench bedding and/or backfill and require the Contractor to remove and recompact, at the Contractor's expense, any bedding or backfill found to be compacted to a density less than that specified.

LEAKAGE TESTING

General Methods of leakage tests which are suitable for various conditions are: 1) low pressure air exfiltration; 2) water infiltration; and 3) water exfiltration. The Engineer shall designate the type of test to be performed and the manner in which it shall be conducted.

Low Pressure Air Exfiltration

Low pressure air exfiltration testing may be used under any groundwater conditions. If a condition exists in which the average groundwater level is above the top of the pipe, the Engineer shall make adjustments to the specified test pressures to account for any backpressure imposed by the groundwater. The minimum time requirements for air testing for a 0.5 psig pressure drop from 3.5 psig to 3.0 psig shall not be less than that shown in the following table:

Specification Time for Length Shown (mmsec)

Pipe Diam. (in.)	100'	150'	200'	250'	300'	350'	400'
8	3:47	3:47	3:47	3:47	3:48	4:06	5:04
10	4:43	4:43	4:43	4:57	5:56	6:56	7:54
12	5:40	5:40	5:42	7:08	8:33	9:58	11:24
15	7:05	7:05	8:54	11:08	13:21	15:35	17:48
18	8:30	9:37	12:49	16:01	19:14	22:26	25:38
21	9:55	13:05	17:27	21:49	26:11	30:32	34:54

Should any test on any section of the pipeline disclose an air loss rate greater than permitted, the Contractor shall, at his own expense, locate and repair the defective joints or pipe sections. After the repairs are completed, the line shall be retested until the air loss rate is within the specified allowance i.e. the pipeline holds the pressure within the allowable pressure drop of 0.5 psi for a minimum time equal to the time(s) shown in the table.

Deflection Testing

For flexible sewer pipe, the entire length of installed pipe shall be tested for acceptance with an approved 'go-no-go mandrel' under the observation of the Engineer. The testing shall be conducted after the final backfill has been in place for at least 30 days. No pipe shall exceed a deflection of 5% of the inside diameter. The deflection test shall be run using a mandrel having a diameter equal to 95% of the inside diameter of the pipe. The test shall be performed without a mechanical pulling device. All pipe exceeding the allowable deflection shall be replaced or repaired and retested.

The Contractor shall furnish all the necessary equipment and personnel to properly conduct all tests which will be monitored by the Engineer.

The contractor shall notify the City Engineer a minimum of twenty-four (24) hours in advance of beginning any test. City Engineer 260.665.6748.

MANHOLES

Description of Work

The work to be done in accordance with these specifications and the accompanying plans consists of furnishing all labor, excavation, materials, and accessories necessary to construct, reconstruct, or adjust to grade, manholes, at the depths and locations shown on the plans and in accordance with these specifications. The work will include excavation, removal and disposal of water, sheeting and shoring, disposal of excess materials; furnishing and placing manhole sections; modifying existing structures; protecting gas and water services, underground telephones or electric cables; standard backfilling; clean-up; and such other work as may be necessary in order that the structures be made serviceable and that the work be completed in a satisfactory manner.

Materials

All precast manholes shall be manufactured in accordance with ASTM C-478. References to diameter are applicable to corresponding dimensions in other than circular sections. The minimum area of reinforcing steel shall be 0.12 sq. in. per lineal foot. For precast manholes sections, where required, inverts shall be prepowered at the locations and depths shown on the plans. The annular space between the pipe and structure must be sealed where the pipe enters or exits each structure. This annular space shall be sealed using 'A-Lok' brand compression gaskets or rubber 'PSX' waterproof boots installed at the time of manufacture. Manhole steps shall be 3/8" steel reinforced steps with polypropylene plastic coating and shall comply with ASTM A48. Manhole steps shall be spaced vertically at a maximum of sixteen (16) inches so as to form a continuous ladder from the top of the manhole to a point no greater than two (2) feet from the bottom.
Cast-in-place concrete bases shall conform to the dimensions as shown on the plans and shall be constructed using concrete with a twenty-eight (28) day compressive strength of 3,000 psi. Reinforcing bars shall be deformed billet-steel having a yield strength of 60,000 psi.
Castings for the various structures shall be of the type as indicated on the plans and shall conform to either ASTM A48 for Gray Cast Iron or ASTM A536 for Ductile Cast Iron.

Installation

Excavation shall be to the established bottom of the foundations. The finished surface shall be firm and smooth. If soft or yielding spots are encountered at this elevation, they shall be removed, backfilled with suitable material, and tamped into place.
Base sections shall be placed on a well-graded granular bedding course conforming to the requirements for sewer bedding, but not less than four (4) inches in thickness and extending to the limits of the excavation. The bedding course shall be firmly tamped and made smooth and level to assure uniform contact and support of the base section.

Precast sections of the structures shall be inspected prior to installation. Section joints damaged during transport or installation shall be repaired or replaced at the expense of the Contractor. Section joints shall be sealed with o-ring gaskets or butyl rope in accordance with ASTM C 443. All lift holes in precast sections shall be thoroughly wetted and then be completely filled with non-shrinking concrete grout, smoothed and coated with bituminous waterproofing material, both inside and out, to ensure water tightness.

Drop Manholes
Where the invert elevation of an incoming sewer is 24-inches or greater above the spring line of the out going sewer, a drop manhole is required.

Structures under or directly adjacent to pavements shall be backfilled with I.D.O.T. B-Borrow. The material shall be placed such that no less than 1'-0" in width surrounds the structure.

Manhole Integrity Testing

Manholes shall be air tested in accordance with ASTM C1244-93, Standard Test Method For Concrete Sewer Manholes by the Negative Air Pressure (Vacuum) Test. If the manhole fails the initial test, necessary repairs shall be made by an appropriate method. The manhole shall then be retested until a satisfactory test is obtained.

MANHOLE VACUUM TEST

Whenever possible, manhole vacuum testing should be performed prior to backfilling the outside of the structure. This will allow the contractor access to the outside of the manhole if there should be a leak. It is easier to stop a vacuum leak from the outside of the manhole than it is from the inside of the manhole. An outside joint wrap can be added vacuum insurance. A product such as ConWrap CS-212 by Conseal can be used, or a wrap can be made by applying trowelable mastic to the outside of the joint and then wrapping a piece of thin plastic around the joint.

Preparation of the Manhole

1.) Plug all lift holes.
2.) Fill any obvious imperfections and "honey-combed" areas.
3.) All pipes entering the manhole shall be temporarily plugged, taking care to securely brace the pipes and plugs to prevent them from being drawn into the manhole.
4.) Clean top of manhole casting to accept test-head seal.

Procedure

1.) The test head shall be placed on top of the manhole casting.
2.) A vacuum of 10 in. of mercury shall be drawn on the manhole and the valve on the vacuum line to the test head closed and the vacuum pump shut off. The time for the vacuum to drop to 9 in. of mercury will be recorded.
3.) The manhole will pass if the time for the vacuum reading to drop from 10 in. of mercury to 9 in. of mercury meets or exceeds the values indicated in Table 1.
4.) If the manhole fails the initial test, necessary repairs shall be made by an approved method. The manhole shall then be tested and repaired as necessary until a satisfactory test is obtained.

The contractor shall notify the City Engineer a minimum of twenty-four (24) hours in advance of beginning any test. City Engineer 260.665.6748.

Minimum Test Times for Various Manhole Diameters (In Seconds)

Depth (ft)	30 In. Dia.	33 In. Dia.	36 In. Dia.	42 In. Dia.	48 In. Dia.	54 In. Dia.	60 In. Dia.	66 In. Dia.	72 In. Dia.
8'	11	12	14	17	20	23	26	29	33
10'	14	15	18	21	25	29	33	36	41
12'	17	18	21	25	30	35	39	43	49
14'	20	21	25	30	35	41	46	51	57
16'	22	24	29	34	40	46	52	58	67
18'	25	27	32	38	45	52	59	65	73
20'	28	30	35	42	50	58	65	72	81
22'	31	33	39	46	55	64	72	79	89
24'	33	36	42	51	59	69	78	87	97
26'	36	39	48	55	64	75	85	94	105
28'	39	42	49	59	69	81	91	101	113
30'	42	45	53	63	74	87	96	108	121

Placing Castings

A minimum of (4) inches and no more than twelve (12) inches of concrete adjusting rings shall be provided between the top of the cone or slab and the underside of the manhole casting for adjustment of the casting to the rim elevation shown on the plans. If no rim elevation is shown on the plans, the top of the manhole casting shall be flush with the surrounding finish grade unless otherwise directed by the Engineer.

Bitumastic material is required between all adjusting rings and between the top of cone and the first adjusting ring and between the underside of the casting and the last adjusting ring. Castings shall be set accurately to the finished elevation so that no subsequent adjustment will be necessary.

UTILITIES

The utilities shown on the plans are a guide for the contractor. The Contractor is responsible for contacting 'Holey-Moley' at 1-800-382-5544 at least 72 hours prior to beginning any work. The contractor is responsible for verifying the locations of marked utilities and should include in his bid the necessary hand- digging required to locate other utilities adjacent to the proposed work.

CONSTRUCTION SIGNS, BARRICADES, and FLAGMEN

The contractor is responsible for providing the necessary construction signs, barricades, traffic cones, fencing, flagmen, and other devices that may be necessary to warn motorists and to protect the work. If the road must be closed to traffic, the contractor shall notify Steuben County Communications at 668-1000 X4030 and Angola Dispatch at 665-2121.

APPROVAL OF MATERIALS

Prior to ordering any materials, the contractor shall submit manufacturers' shop drawings, of all materials (pipe, fittings, valves, risers, structures, castings, etc) proposed to be incorporated into the work, to the City Engineer for approval.

COORDINATION WITH CITY OF ANGOLA WASTEWATER DEPARTMENT

The contractor shall notify Jeff Gaff, WWTP Supt., a minimum of twenty-four (24) hours in advance of beginning project. Wastewater Superintendent 260.665.6806

RECORD DRAWINGS - AS-BUILTS

A. At the completion of the work and prior to acceptance, the CONTRACTOR responsible for each division of the work shall provide the DESIGN ENGINEER with a marked-up set of drawings showing all changes or variations from the original drawings. These changes shall be made on a set of field drawings as the work takes place and not from memory when the work is done. This set of drawings should be kept clean in a location at the site where the ENGINEER/ARCHITECT or inspector may examine them.
B. The marked-up drawings shall be accurate. Arbitrary markings are of no value. Careful measurements shall be made to locate underground exterior and underground interior sewers, gas lines, water lines, electrical conduit and miscellaneous piping.
C. Measurements shall be recorded as follows:
1. Length between manholes, measured from center of castings.
2. Manhole depths, rim to all inverts and direction.
3. Location of lateral connections, measured from the downstream manhole.
4. Length of lateral, measured horizontally from the center of the sewer main to the end of the lateral pipe.
5. Length of riser, measured from the center of the sewer main to the bend point.
6. Depth of lateral at the property line, measured from top of the pipe to the ground elevation (preferably sidewalk or curb).
D. When the above is checked and approved by the Design Engineer it is required by Ordinance that the as-builts be certified by an Engineer or Land Surveyor. All as-built information must meet the Unified Development Ordinance section 9.08. requirements.

FINAL INSPECTION

A. During construction, due care shall be taken to thoroughly clean every sewer, manhole, inlet or other accessory and to prevent any earth, sand, brick , concrete or other foreign substance form entering, obstructing or remaining in any part of the work. As the work approaches completion, and before the final estimate, the CONTRACTOR shall systematically go over the entire work and prepare it for final inspection.
B. All sewers and manhole inverts, large enough to be clean by hand, shall have all lumps of cement, protruding gaskets, rubbish and improper objects removed, and the sewer shall be flushed and left with a wholly clean and smooth surface. Any sewer main containing sand, gravel, clay or foreign material shall be flushed from the sewer. The water for flushing shall be provided for and paid for by the CONTRACTOR. This water shall not be directed to the sanitary sewer system unless permission is so granted by the OWNER.

CONNECTIONS TO EXISTING SEWERS

Flexible Couplings & Saddles
PVC
K-4 Inserta Tee®

Inserta Tee® is a three-piece service connection that is compression fit into the cored wall of the mainline or manhole. InsertaTee® is easy to install and is used on all gravity flow pipe currently on the market. Inserta Tee® consists of a PVC hub, Stainless Steel band and rubber Sleeve, for side services of 4" (100mm) through 12" (300mm) and fits all mainline diameters.

Installation Procedures:
1.
Make sure bit is perpendicular to mainline. Core the proper size hole. Feel inside hole and clear any remaining material.
2.
Insert the rubber sleeve into the cored hole with the gold vertical line on the rubber sleeve facing to the side of the mainline. The upper segment should be on top of the wall or rib and the lower segment (PVC, ribbed & Polyethylene pipe only) should be on the inside of the pipe. Feel inside to be sure lower segment is flat against inside wall.
3.
Apply the Inserta Tee® solution supplied to the inside of the rubber sleeve and to the outside of the PVC hub adapter spigot. wArnInGl using pipe lube may result in hub adapter popping out!
4.
Place the PVC hub adapter into the rubber sleeve. Make sure that the red vertical line on the pvc hub adapter is in line with the gold vertical line on the rubber sleeve. Push hub adapter in as far as possible by hand. Make sure hub adapter is perpendicular to mainline. Forcing hub adapter through at an angle may cause damage to rubber sleeve or hub adapter.
5.
Place a 2 x 4 board onto the top of the PVC hub adapter.
6.
The red horizontal line at the top of the hub adapter is a depth mark. This tells the installer just how far to drive the adapter into the rubber sleeve. Drive the PVC hub adapter into the rubber sleeve to where the horizontal red line on the PVC hub adapter meets the top of the rubber sleeve.
7.
Place the stainless band around the top of the rubber sleeve and tighten down.
8.
Install side-service pipe in normal manner.

SANITARY FORCEMAIN SPECIFICATIONS & TESTING

MATERIALS:

All sanitary forcemains shall be constructed using PVC SDR 21 (200 PSI) ASTM D 2241 or HDPE PE 4710 SDR 11 (160 PSI) for open-cut installation and SDR 9 (200 PSI) for installation by directional boring. HDPE pipe shall conform to ASTM F 714. The nominal laying lengths of PVC pipe shall be twenty (20) feet unless shorter or longer lengths are required for construction conditions.

INSTALLATION:

Sanitary forcemains shall be constructed at the depths, locations, and grades as shown on the plans or directed by the Engineer. All forcemains shall have a minimum cover of 5'-0" unless otherwise noted.

The pipe shall be placed on a four inch (4-in) min. compacted bed of granular material that shall extend to a height no lower than twelve (12) inches above the top of pipe. Clean excavated material shall be placed above the granular material and compacted in lifts not exceeding nine (9) inches.

The Contractor shall install a two-inch (2-in) wide polyethylene locating tape with a metallic core, two (2) feet above all forcemains, the tape shall be labeled with the warning message 'Caution Sewer Line Buried Below'.

In addition to the warning tape above, the contractor shall attach a continuous green sheathed solid copper or copper clad steel wire line (minimum #10 AWG) directly to all PVC or HDPE forcemain piping prior to backfilling or installing by directional boring. Directional bored forcemains shall have two (2) locating wires attached. In both cases, open-cut or boring, the locating wire(s) shall be attached to the forcemain by the use of duct tape at a spacing not to exceed Fifty (50) feet. Tracer Wires shall be accessible in valve chamber and all valve structures on the forcemain line to the downstream discharge point. Contractor is responsible to test conductors for continuity prior to and after backfilling and also prior to and after directional boring. Contractor responsible to repair any breaks in the line(s) which occur prior to final Owner acceptance of force main.

TESTING OF PVC FORCEMAINS

The contractor shall perform a pressure & leakage test of the new PVC forcemain prior to acceptance by the Owner. The forcemain shall be tested using hydrostatic pressure of 50 p.s.i.g. for a duration of two (2.0) hours on each section tested. Leakage in any segment of the line shall not exceed the value specified by the formula:
$L = (ND\sqrt{P})/7400$
where: L = allowable leakage in gallons/hr.
N = number of joints in the length of line tested
D = nominal pipe diameter in inches
P = avg. test pressure during the test in p.s.i.g.

The test pressure shall not exceed the pressure rating of the pipe, fittings, connected appurtenances, or thrust restraint devices.
TESTING OF HDPE FORCEMAINS

New HDPE force mains shall be subjected to a hydrostatic test pressure that is 1.5 times the system design pressure but in no case shall the test pressure be less than 50 PSI. The force main shall be tested in accordance with procedures taken from PPI Technical Report TR-31 by the Plastic Pipe Institute. Testing shall take place after the force main has been installed in the trench or by directional boring.

TEST PROCEDURE FOR HDPE PIPE

* Fill the pipeline with water after it has been laid; bleed off any trapped air. Subject the lowest elevation in the system to a test pressure that is 1.5 times the design pressure, and check for any leakage. When, in the opinion of the engineer, local conditions require that the trenches be backfilled immediately after the pipe has been laid, apply the pressure test after backfilling has been completed but not sooner than a time which will allow sufficient curing of any concrete that may have been used. Typical minimum concrete curing times are 36 hours for early strengths and 7 days for normal strengths.

* The test procedures consist of two steps; the initial expansion and the test phase. When test pressure is applied to a water filled pipe, the pipe expands. During the initial expansion of the pipe under test, sufficient make-up water must be added to the system at hourly intervals for 3 hours to maintain the test pressure. After about 4 hours, initial expansion should be complete and the actual test can start.

* When the test is to begin, the pipe is full of water and is subjected to a constant test pressure of 1.5 times the system design pressure. The test phase should not exceed 3 hours, after which time any water deficiency must be replaced and measured. Add and measure the amount of make-up water required to return to the test pressure and compare this to the maximum allowance in the table below.

* An alternate leakage test consists of maintaining the test pressure (described above) over a period of 4 hours and then dropping the pressure by 10 psi (0.69 MPa). If the pressure then remains within 5% of the target value for 1 hour, this indicates there is no leakage in the system.

NOTES:

* Under no circumstances shall the total time under test exceed 8 hours at 1.5 times the system pressure rating. If the test is not complete within this time limit (due to leakage, equipment failure, etc.), the test section shall be permitted to 'relax' for 8 hours prior to the next test sequence.

* Air testing is not recommended. Additional safety precautions may be required.

* Above procedure taken from PPI Technical Report TR-31 by the Plastic Pipe Institute.

ALLOWANCE FOR EXPANSION UNDER TEST PRESSURE

Nominal Pipe Size (Inches)	Make-up Water (gal/100ft) 1 Hour Test	Make-up Water (gal/100ft) 2 Hour Test	Make-up Water (gal/100ft) 3 Hour Test
2"	0.08	0.12	0.15
3"	0.10	0.15	0.25
4"	0.13	0.25	0.40
5"	0.21	0.41	0.63
6"	0.30	0.60	0.90
8"	0.50	1.00	1.50
10"	0.75	1.30	2.10
12"	1.10	2.30	3.40
14"	1.40	2.80	4.20
16"	1.70	3.30	5.00
18"	2.20	4.30	6.50

CITY OF ANGOLA
WASTEWATER DEPARTMENT
210 N. PUBLIC SQUARE
ANGOLA, IN. 46703 - 260.665.2541
260.665.6806

CITY OF ANGOLA SANITARY SEWER STANDARDS

SCALE: VARIES
FILE:
DRAWN: N.R.G.
CHECKED: A.R.C.
DATE:
DESIGN: A.R.C.
SHEET: 1 OF: 2

REVISIONS:
9/22/16 TEST PRESSURES AND TIME
9/11/17 SIMPLEX PUMPING STATION - AIR VALVE
6/12/23 WWTP Contact Information

Location:J:\Engineering\AcadDwg\Sanitary Sewer Details\dwg\savedby\Gerber/date:3/25/2021 8:55 AM

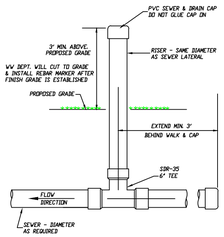

NEW SUBDIVISION CONSTRUCTION LATERAL CLEANOUT OUTSIDE PAVEMENT LIMITS WITHIN R/W

N.T.S.

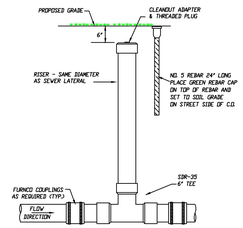

6" LATERAL CLEANOUT OUTSIDE PAVEMENT LIMITS WITHIN R/W

N.T.S.

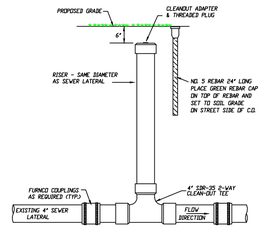

4" LATERAL CLEANOUT OUTSIDE PAVEMENT LIMITS WITHIN R/W

N.T.S.

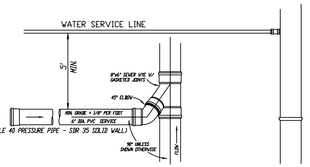

5' MIN. HORIZONTAL SEPARATION VIEW

5' MIN. HORIZONTAL SEPARATION BETWEEN SERVICE LATERALS OR 12" VERTICAL SEPARATION, PROVIDED THAT THE WATER SERVICE IS IN A SEPARATE TRENCH OR ON AN UNDISTURBED EARTH SHELF LOCATED ABOVE AND TO ONE SIDE OF THE SEWER LATERAL.

INTERNATIONAL PLUMBING CODE 603.2

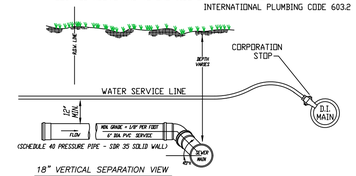

18" VERTICAL SEPARATION VIEW

SANITARY SEWER TAP & WATER SERVICE LAYOUT

N.T.S.

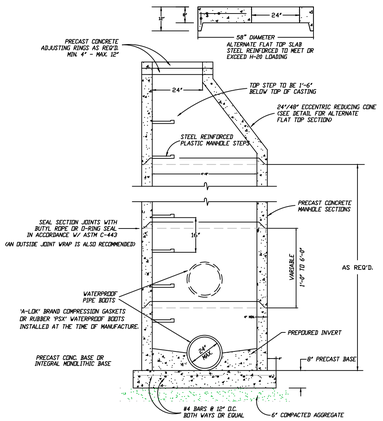

TYPE C MANHOLE

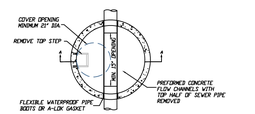

PLAN VIEW

N.T.S.

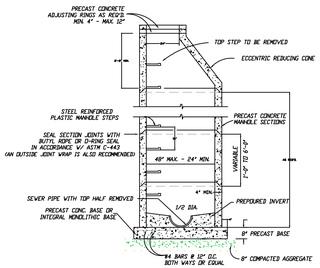

SECTION A-A

N.T.S.

CONTROL MANHOLE FOR INDUSTRIAL SURVEILLANCE

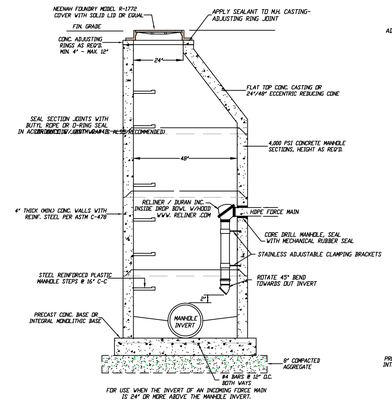

HDPE FORCE MAIN CONNECTION DETAIL

N.T.S.

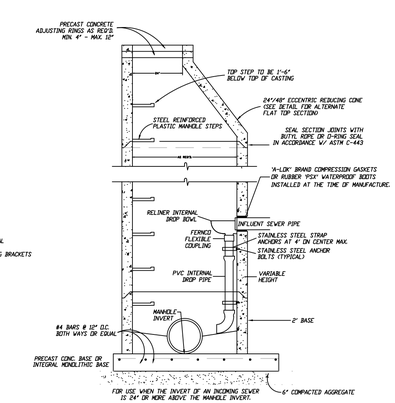

TYPICAL DROP MANHOLE

N.T.S.

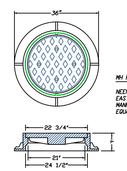

MH FRAME & COVER

N.T.S.

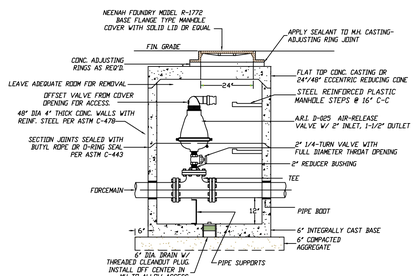

AIR-RELEASE MANHOLE

N.T.S.

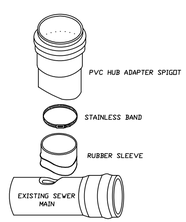

PVC INSERTA TEE ®

NTS

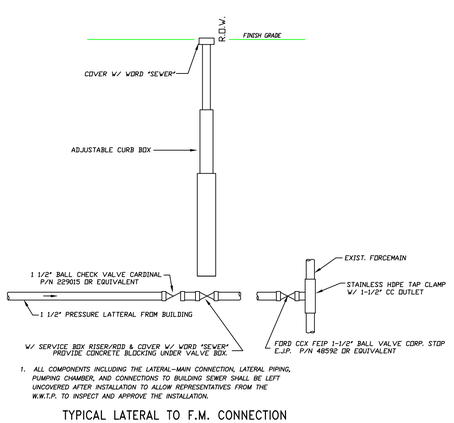

1. ALL COMPONENTS INCLUDING THE LATERAL-MAIN CONNECTION, LATERAL PIPING, PUMPING CHAMBER, AND CONNECTIONS TO BUILDING SEWER SHALL BE LEFT UNCOVERED AFTER INSTALLATION TO ALLOW REPRESENTATIVES FROM THE W.W.T.P. TO INSPECT AND APPROVE THE INSTALLATION.

TYPICAL LATERAL TO F.M. CONNECTION

(BY HOME OWNER)

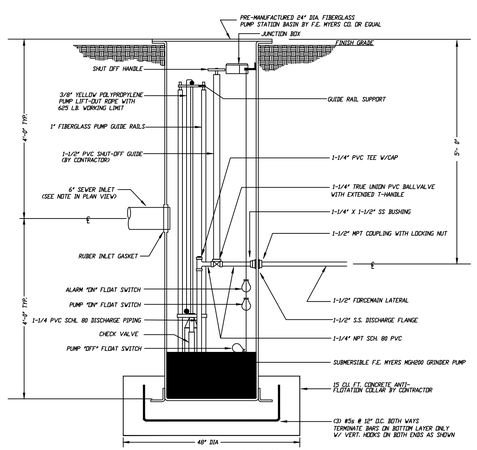

TYPICAL SIMPLEX PUMPING STATION

(BY HOME OWNER)

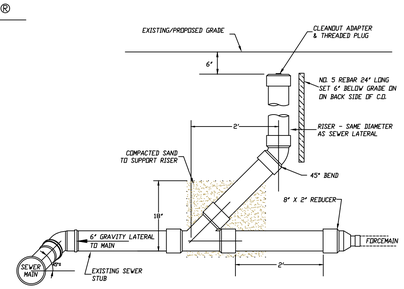

FORCEMAIN CONNECTION TO SANITARY MAIN

N.T.S.

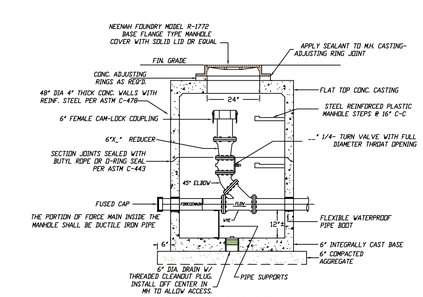

CLEAN-OUT ASSEMBLY

CITY OF ANGOLA

210 N. PUBLIC SQUARE
ANGOLA, IN. 46703 - 260.665.2541

WASTEWATER DEPARTMENT
260.665.6806

CITY OF ANGOLA SANITARY SEWER STANDARDS

SCALE: VARIES
FILE:
DRAWN: N.R.G.
CHECKED: A.R.C.
DATE:
DESIGN: A.R.C.
SHEET: 2 OF: 2

REVISIONS:
9/22/16 - TEST PRESSURES AND TIME
9/11/17 - SIMPLEX PUMPING STATION - AIR VALVE
10/30/19 - LATERAL CONNECTIONS
06/04/25 - TYPICAL DROP MANHOLE

Location:J:\Engineering\Acad\wg\Sanitary Sewer Details.dwg\savedby:NGerber/date:3/25/2021 8:55 AM